NS2113

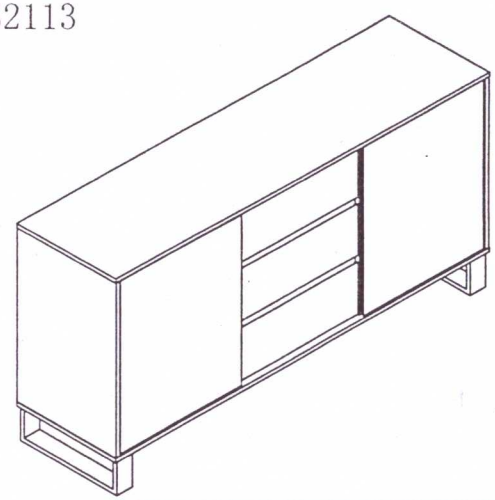

A (a1, a2, Φ15mm) x44	B Φ8*30mm x16	C Φ3.5*35mm x12	D Φ3.5*14mm x24	E x3
F x8	G x6	H Φ4*16mm x24	I M6*15 x8	
J x30	K x1	L x4	M Φ4*16mm x2	N x1

STEP 1

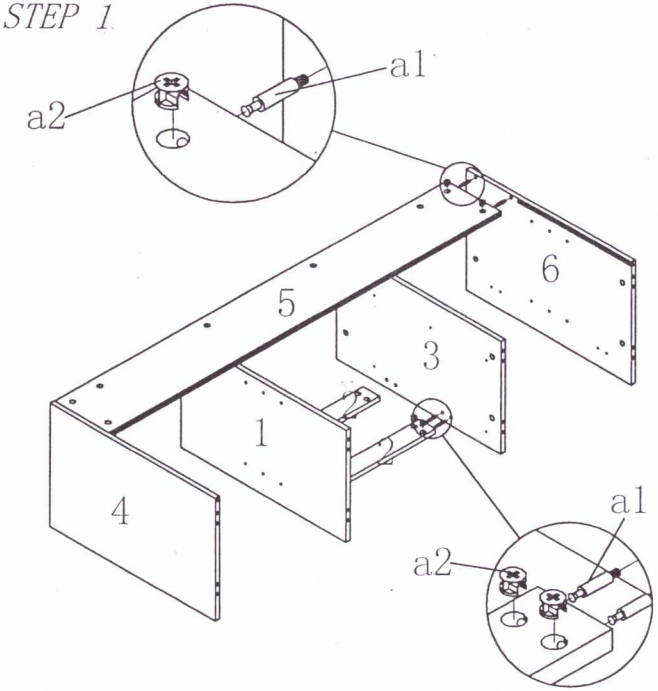

STEP 2

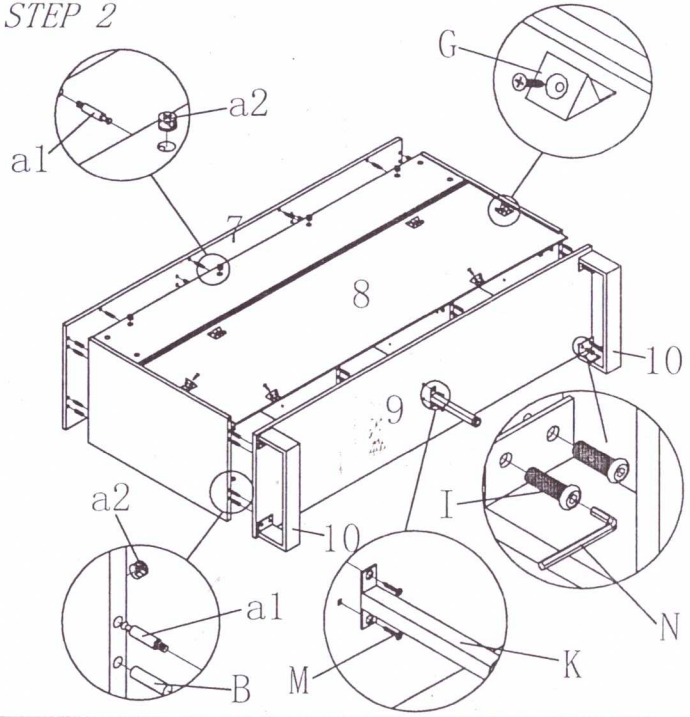

STEP 3

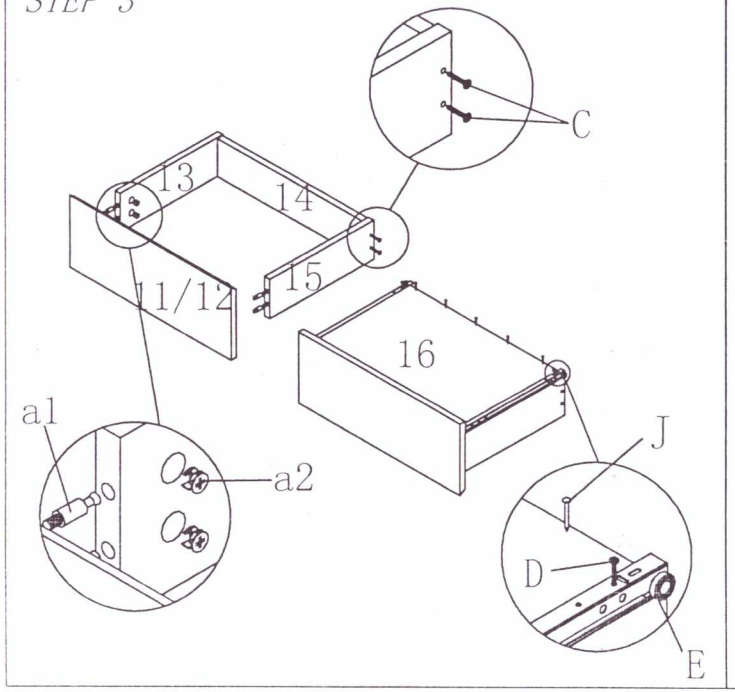

STEP 4

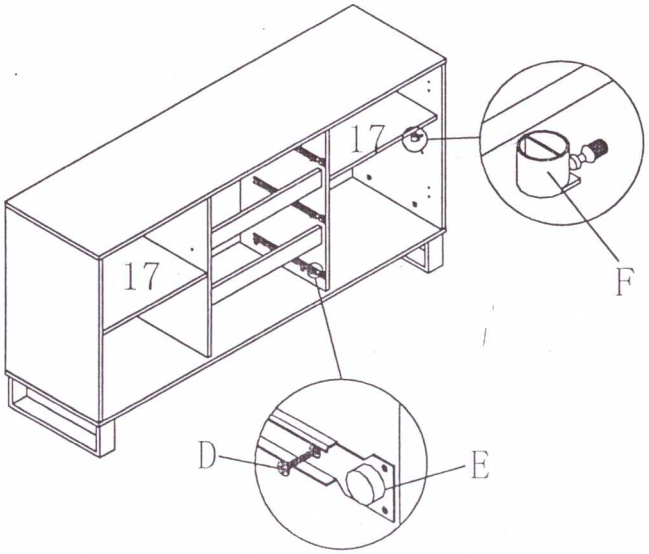
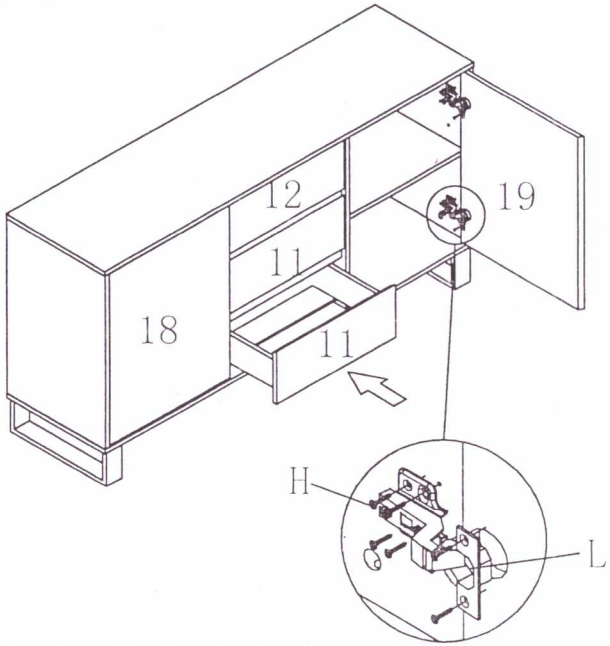
STEP 5